Honors Math II
Unit 9 day 2 ws

Name Key
Period_____ Date_____

Find the measure of each angle.

1) $\boxed{-785^\circ}$

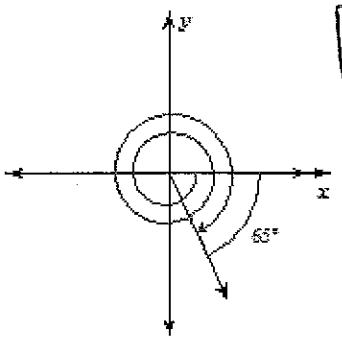

2) $\boxed{-210^\circ}$

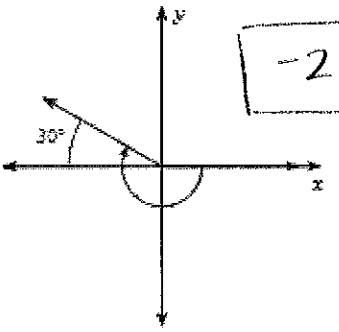

3) $\boxed{865^\circ}$

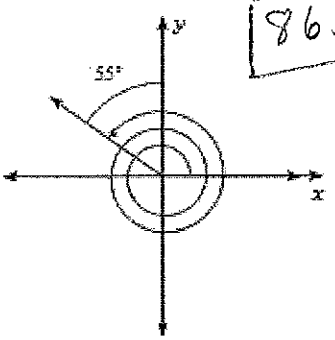

4) $\boxed{590^\circ}$

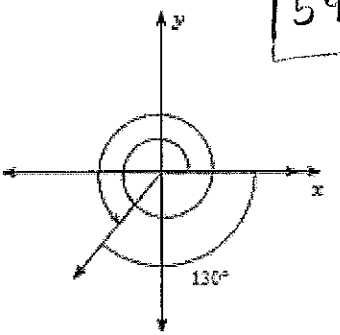

5) $\boxed{815^\circ}$

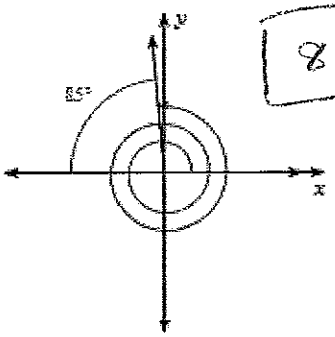

6) $\boxed{-770^\circ}$

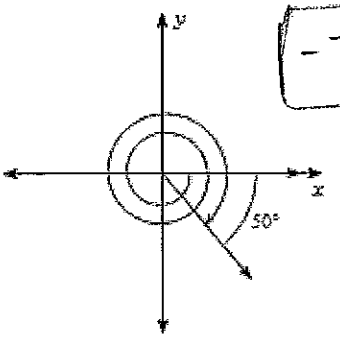

Draw an angle with the given measure in standard position.

7) 270°

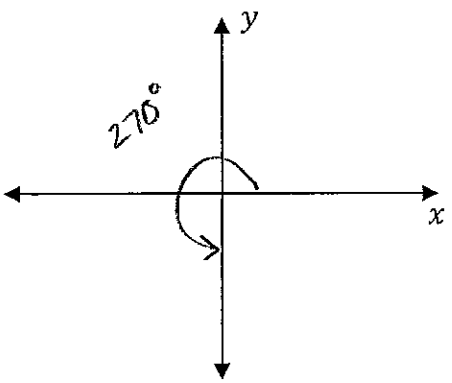

8 700°

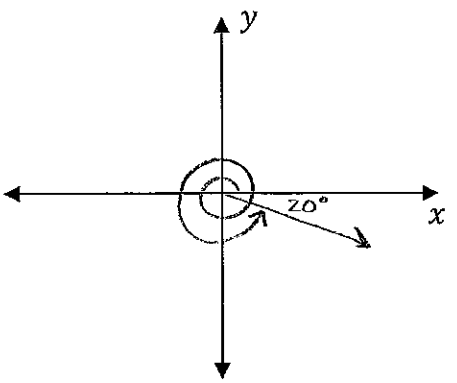

9) 150°

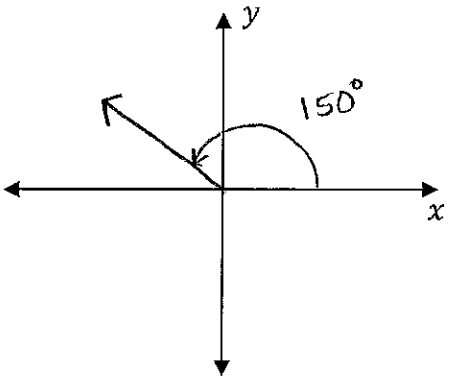

10) −455°

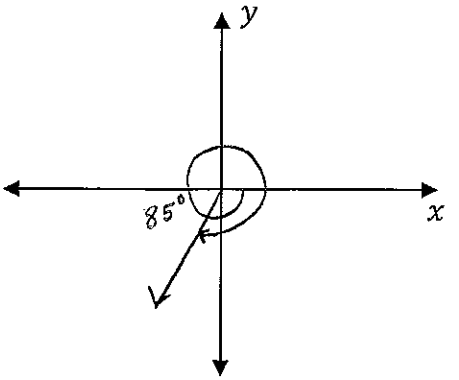

11) 95°

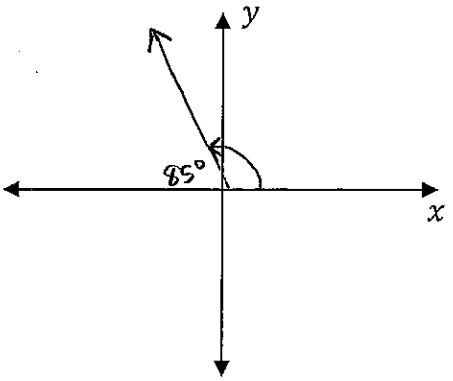

12) −340°

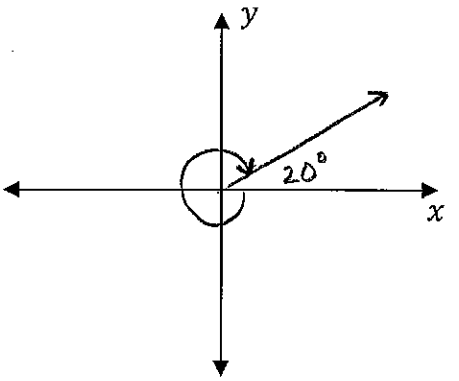

State the quadrant in which the terminal side of each angle lies.

13) −315° I

14) 465° II

15) −715° I

16) −60° IV

Convert each radian measure into degrees.

17) $-\frac{7\pi}{6}\left(\frac{180°}{\pi}\right) = -210°$

18) $\frac{5\pi}{4}\left(\frac{180°}{\pi}\right) = 225°$

19) $\frac{19\pi}{6}\left(\frac{180°}{\pi}\right) = 570°$

20) $\frac{4\pi}{3}\left(\frac{180°}{\pi}\right) = 240°$

21) $-\frac{3\pi}{2}\left(\frac{180°}{\pi}\right) = -270°$

22) $\frac{11\pi}{6}\left(\frac{180°}{\pi}\right) = 330°$

Convert each degree into radians.

23) $105° \left(\frac{\pi}{180°}\right) = \frac{7\pi}{12}$

24) $50° \left(\frac{\pi}{180°}\right) = \frac{5\pi}{18}$

25) $-680° \left(\frac{\pi}{180°}\right) = \frac{-34\pi}{9}$

26) $205° \left(\frac{\pi}{180°}\right) = \frac{41\pi}{36}$

27) $-210° \left(\frac{\pi}{180°}\right) = \frac{-7\pi}{6}$

28) $130° \left(\frac{\pi}{180°}\right) = \frac{13\pi}{18}$

Find a positive and a negative coterminal angle for each given angle.

29) 645° $285° \,\&\, -75°$

30) 120° $480° \,\&\, -240°$

31) 60° $420° \,\&\, -300°$

32) 345° $705° \,\&\, -15°$

33) $\frac{17\pi}{9}$ $\frac{35\pi}{9} \,\&\, -\frac{\pi}{9}$

34) $\frac{56\pi}{45}$ $\frac{146\pi}{45} \,\&\, -\frac{34\pi}{45}$

35) $-\frac{\pi}{9}$ $\frac{17\pi}{9} \,\&\, \frac{-19\pi}{9}$

36) $\frac{2\pi}{45}$ $\frac{92\pi}{45} \,\&\, -\frac{88\pi}{45}$

Solve each triangle. Round answers to the nearest tenth.

37)

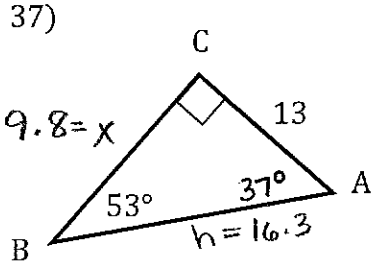

$\cos 37° = \frac{13}{h}$

$h = \frac{13}{\cos 37°}$

$h = 16.3$

$\tan 37° = \frac{x}{13}$

$13 \tan 37° = x$

$9.8 = x$

38)

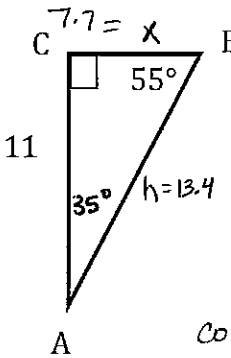

$\tan 35° = \frac{x}{11}$

$11 \tan 35° = x$

$7.7 = x$

$\cos 35° = \frac{11}{h}$

$h = \frac{11}{\cos 35°}$

$h = 13.4$

39)

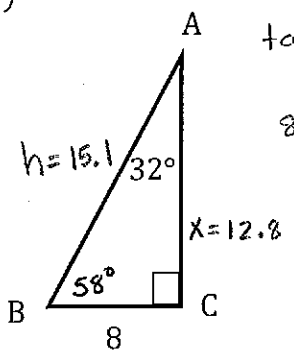

$\tan 58° = \frac{x}{8}$

$8 \tan 58° = x$

$x = 12.8$

$\cos 58° = \frac{8}{h}$

$h = \frac{8}{\cos 58°}$

$h = 15.1$

40)

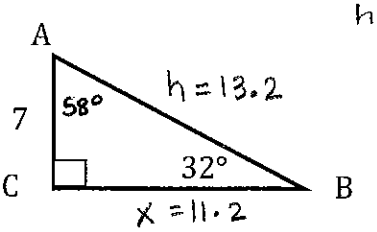

$\tan 58° = \frac{x}{7}$

$7 \tan 58° = x$

$x = 11.2$

$\sin 32° = \frac{7}{h}$

$h = \frac{7}{\sin 32°}$

$h = 13.2$

41)

$\tan 44° = \frac{x}{12.2}$

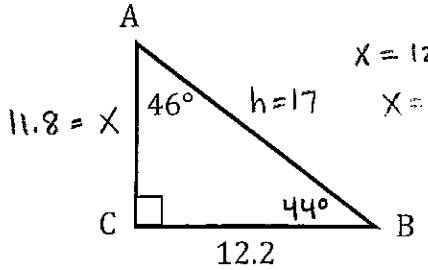

$x = 12.2 \tan 44°$

$x = 11.8$

$\cos 44° = \frac{12.2}{h}$

$h = \frac{12.2}{\cos 44°}$

$h = 16.95$

42)

$8^2 + 15^2 = h^2$

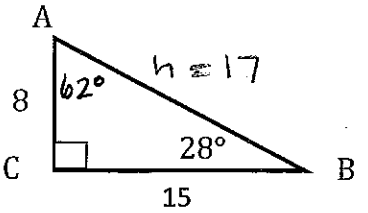

43)

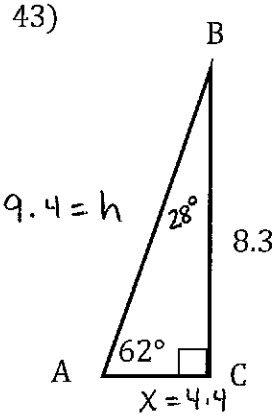

$\tan 28° = \frac{x}{8.3}$

$8.3 \tan 28° = x$

$x = 4.4$

$\sin 62° = \frac{8.3}{h}$

$h = \frac{8.3}{\sin 62°} = 9.4$

44)

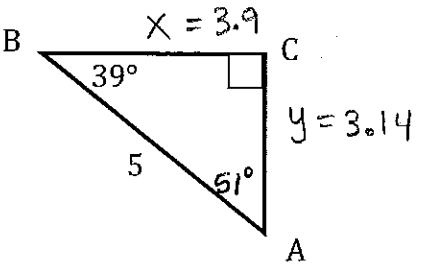

$\sin 51° = \frac{x}{5}$

$x = 5 \sin 51°$

$x = 3.9$

$\cos 51° = \frac{y}{5}$

$y = 5 \cos 51°$

$y = 3.14$

Find the lengths of the missing sides of the special right triangles.

45)

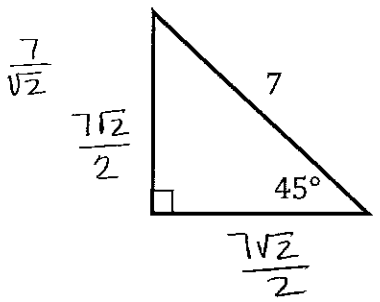

$\frac{7\sqrt{3}}{2\sqrt{3}}$

46)

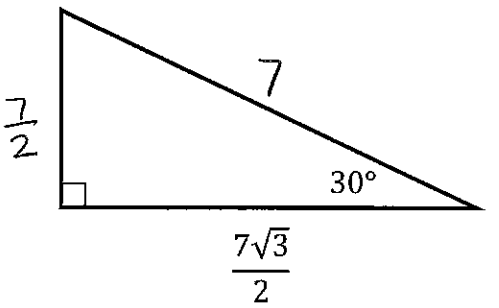

47)

$2\sqrt{2} \cdot \sqrt{3}$

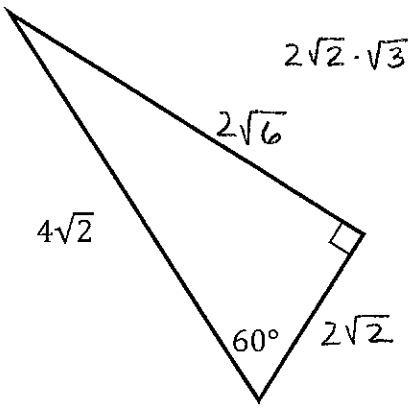

48)